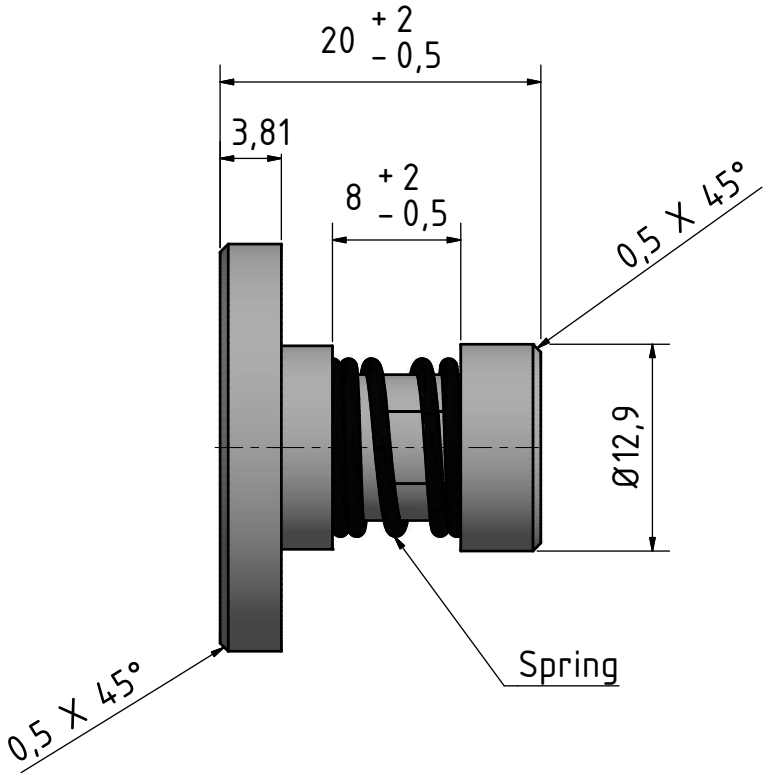

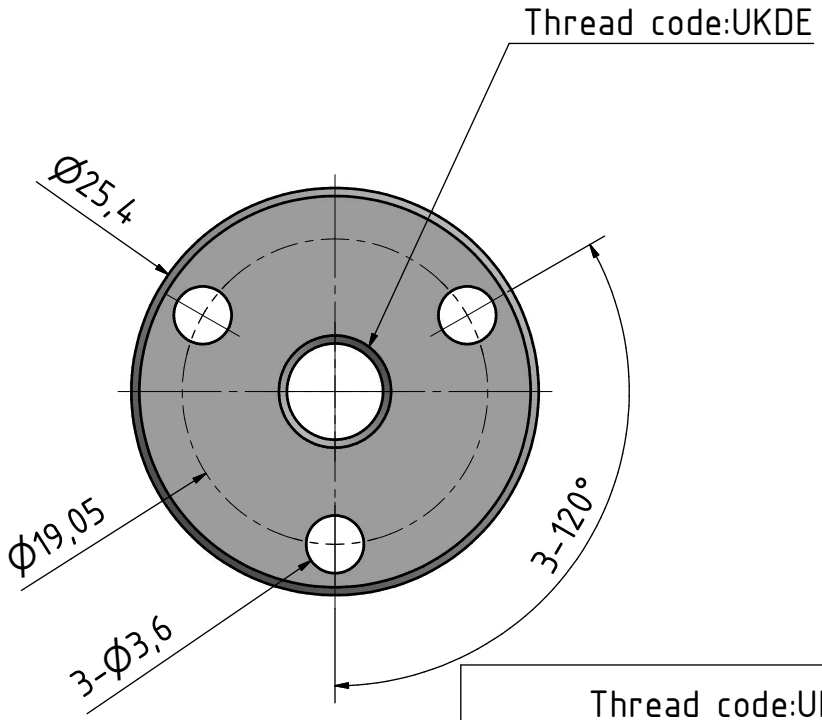

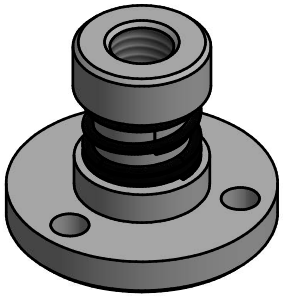

Thread code:UKDE	
Thread type	ACME
Major diameter(mm)	6.604...6.909
Minor diameter(mm)	4.763...4.892
Lead	3.175
Pitch	1.5875
Starts	2

Spring data	
Test length L1(mm)[in]	8.92[0.35]
Force at L1(N)[lb]	20.91[4.7]
Spring rate(N/mm)[lb/in]	3.061[17.479]

Rev	Description	Date	Name

General tolerances ISO 2768-m

Work piece edges DIN 6784

Scale:3:1

Material: POM

Surface:

	Datum	Name
DRN	2018/4/17	L W
CHKD	2018/4/17	X T
APVD	2018/4/17	P.R.

Nanotec® PLUG & DRIVE

axial-compensated nut

LSNUT-AEAE-UKDE

1

A3